SHELTERS

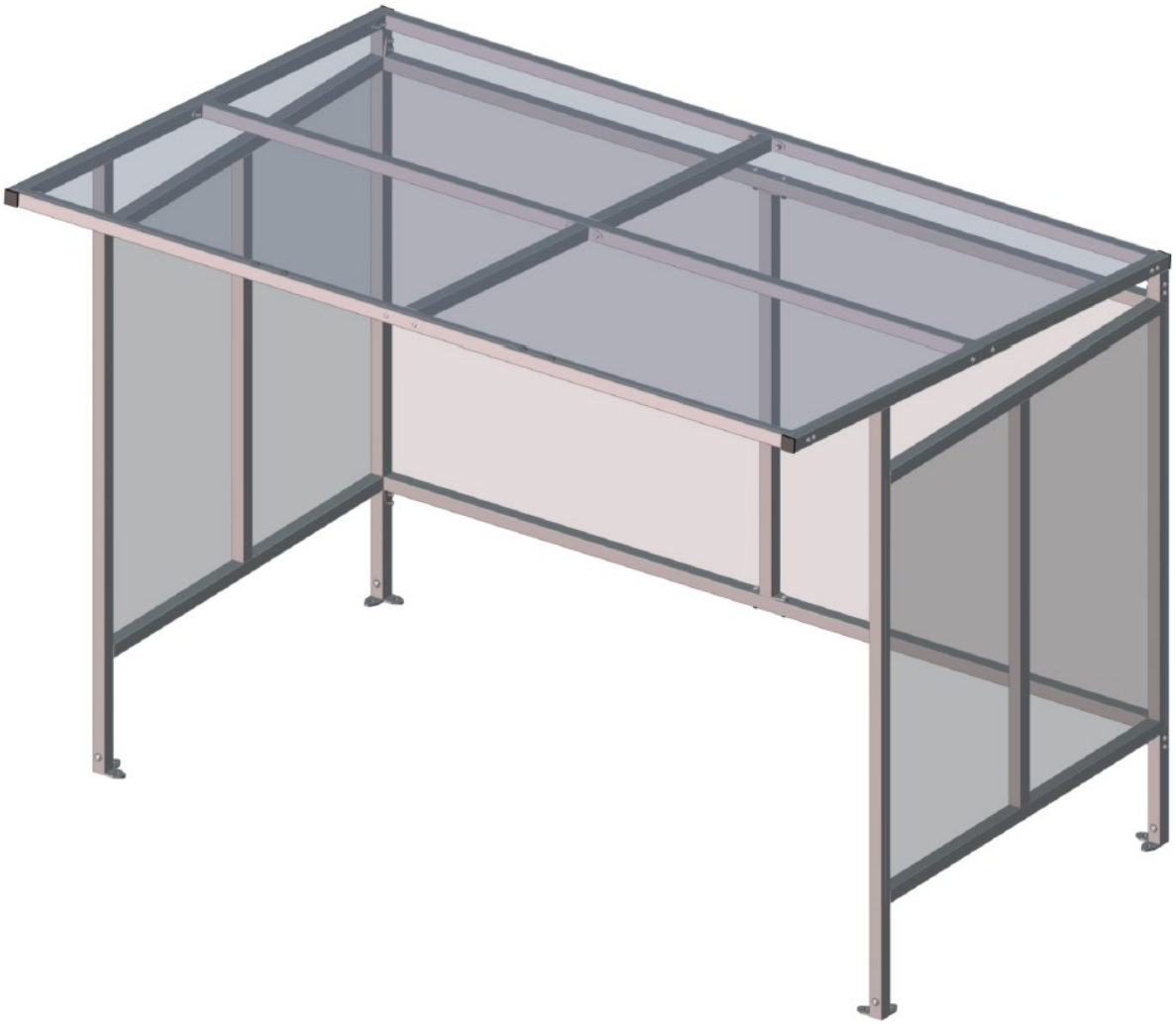

FLAT ROOF SMOKING SHELTER

ASSEMBLY & MAINTENANCE MANUAL

MOSSFIELD ROAD, ADDERLEY GREEN, STOKE ON TRENT, STAFFORDSHIRE. ST3 5BW
TEL: 01782 339320 FAX:01782 339321 WEB: www.iae.co.uk

Safety

Stages of the installation may require the use of personal protection equipment.

When working at heights refer to HSE guidance.

Assembly will require at least two people.

General Dimensions

3 x 2m Shelter

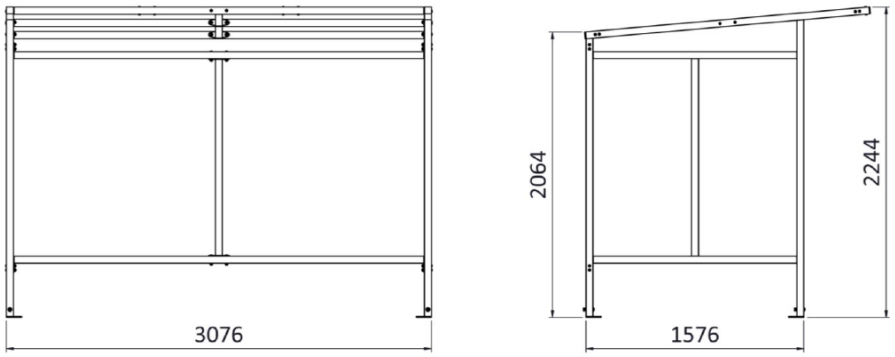

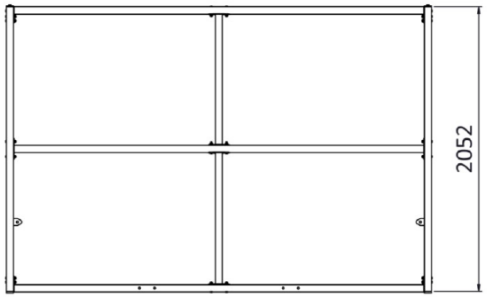

Fig 1

2 x 1.5m Shelter

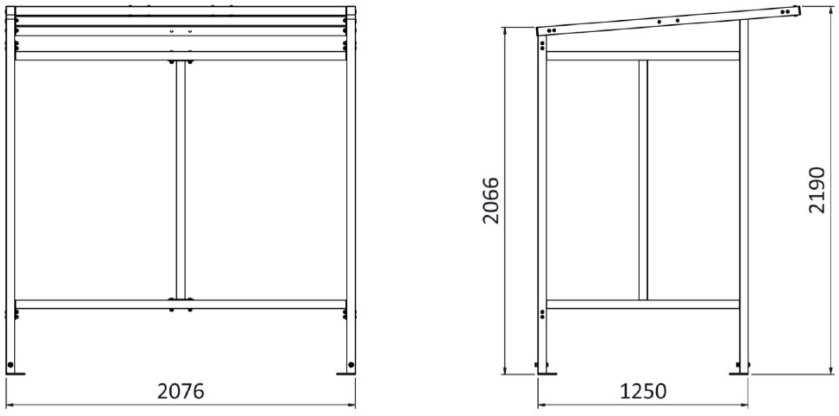

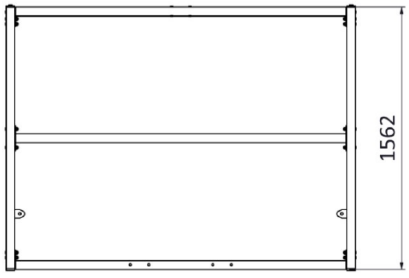

Fig 2

Ground Fixing Detail

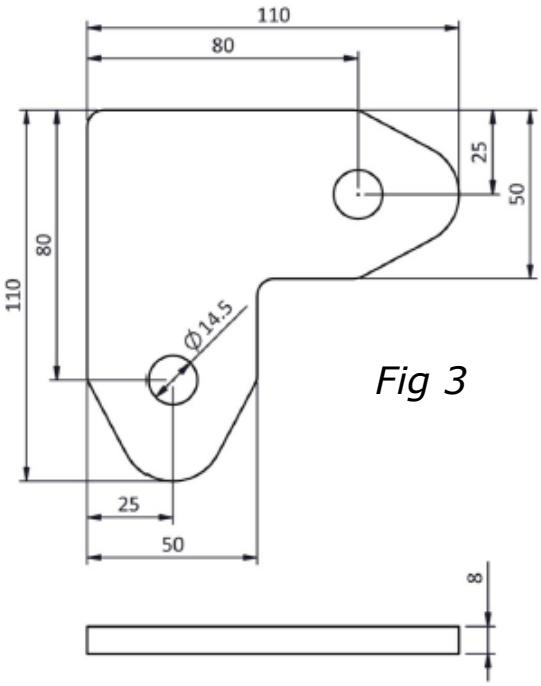

Fig 3

- It is the responsibility of the installer to ensure that the foundations are suitable for the ground conditions.
- The base plates supplied with the flat roof smoking shelter are drilled with Ø14.5mm holes.
- The installer should ensure that the ground fixings are sufficient to secure the smoking shelter to the foundations.

3 x 2m Shelter

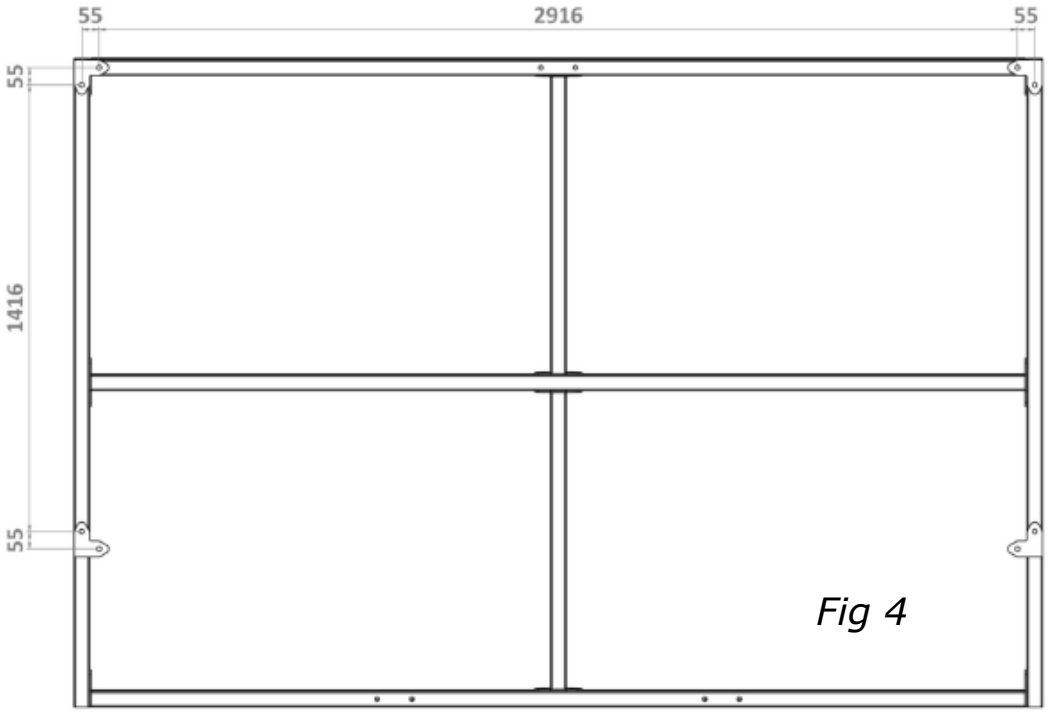

Fig 4

2 x 1.5m Shelter

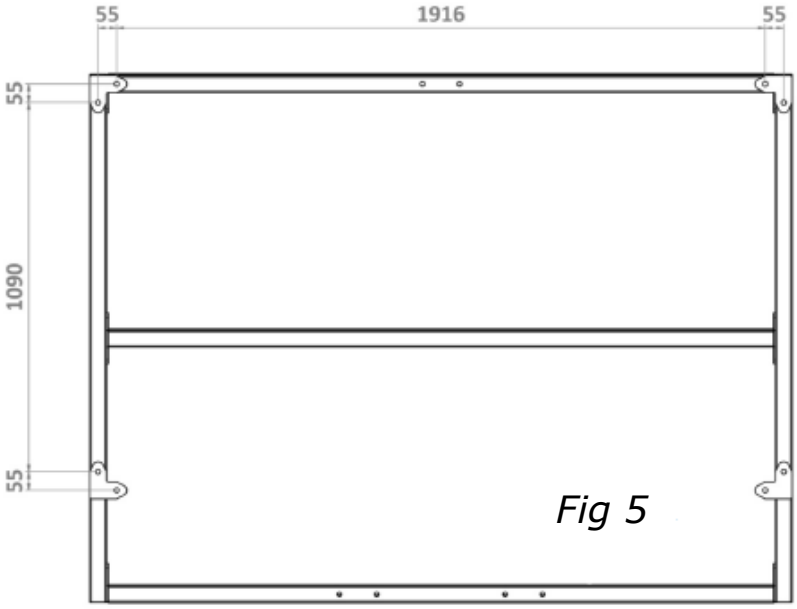

Fig 5

Frame Assembly

The sequence of images is not representative of assembly order, use as a guide for bolt selection only.

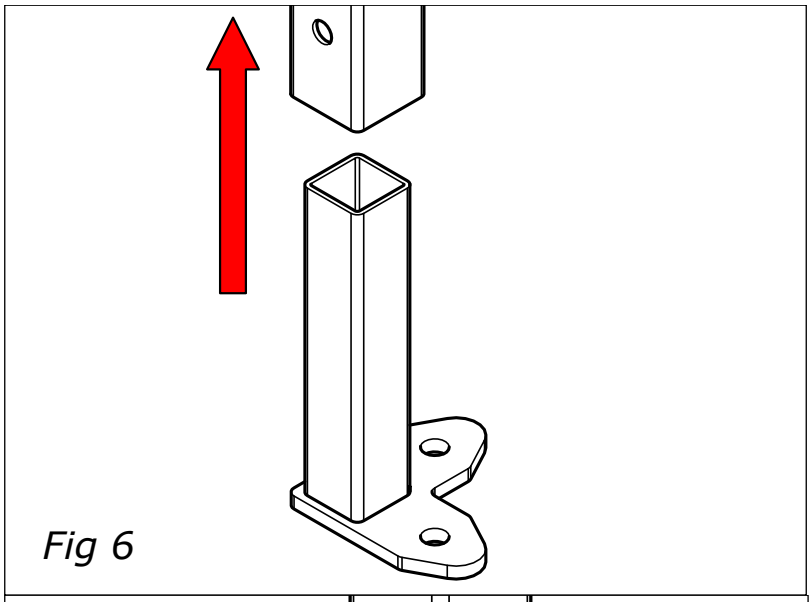

Fig 6

Sit the support feet into the bottom of the shelter end frame sections. Do not fix the feet to the frame at this point.

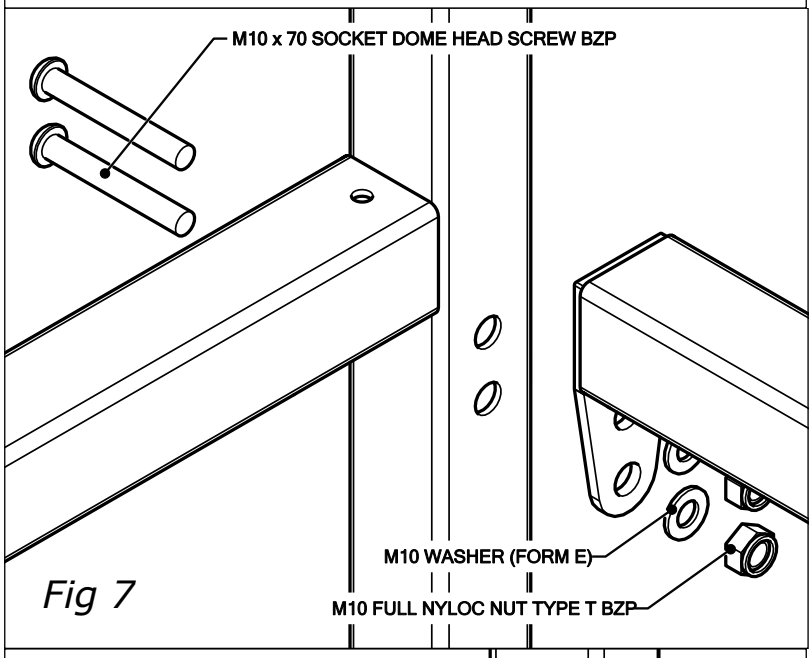

Fig 7

Starting from the bottom, bolt the 5no horizontal rails in place between the end sections using M10 x 70 socket dome head screws.

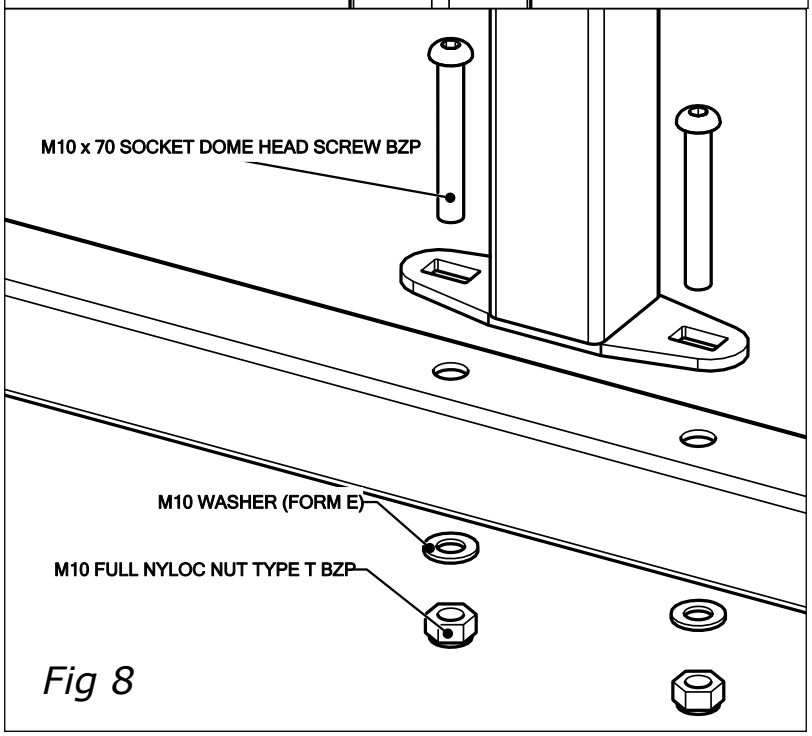

Fig 8

Fit the vertical brace between the rear rails using M10 x 70 dome head screws.

Frame Assembly

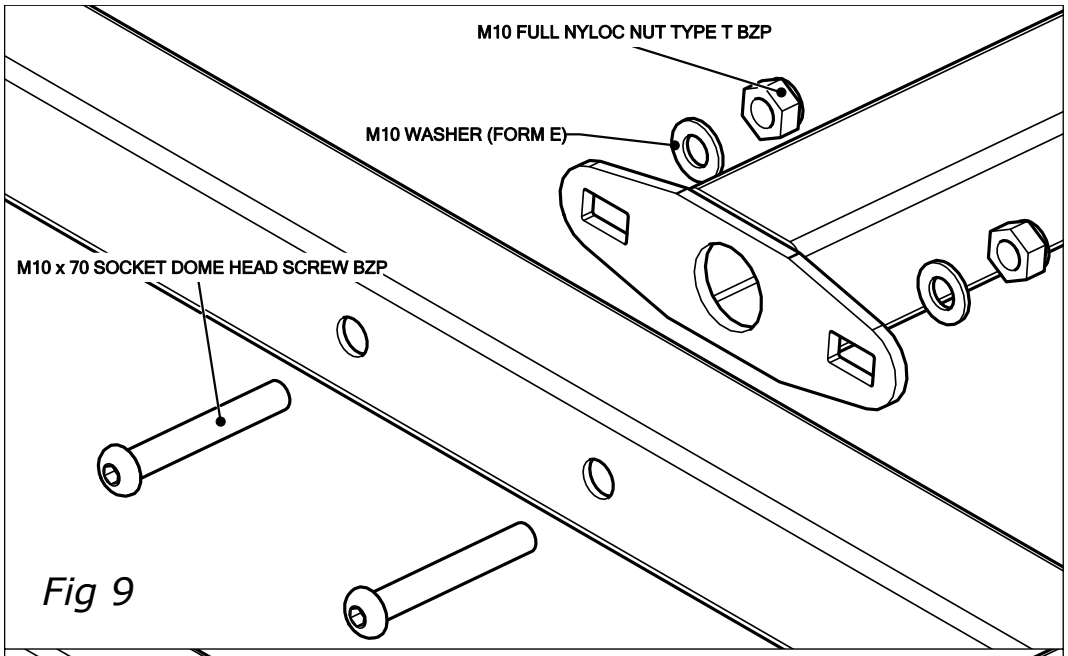

Fig 9

Fit the mid bracing to the roof frame.

Use M10 x 70mm socket dome head screws to bolt to the front and rear rails.

Use M10 x 80mm socket button head screws to bolt through the centre purlin.

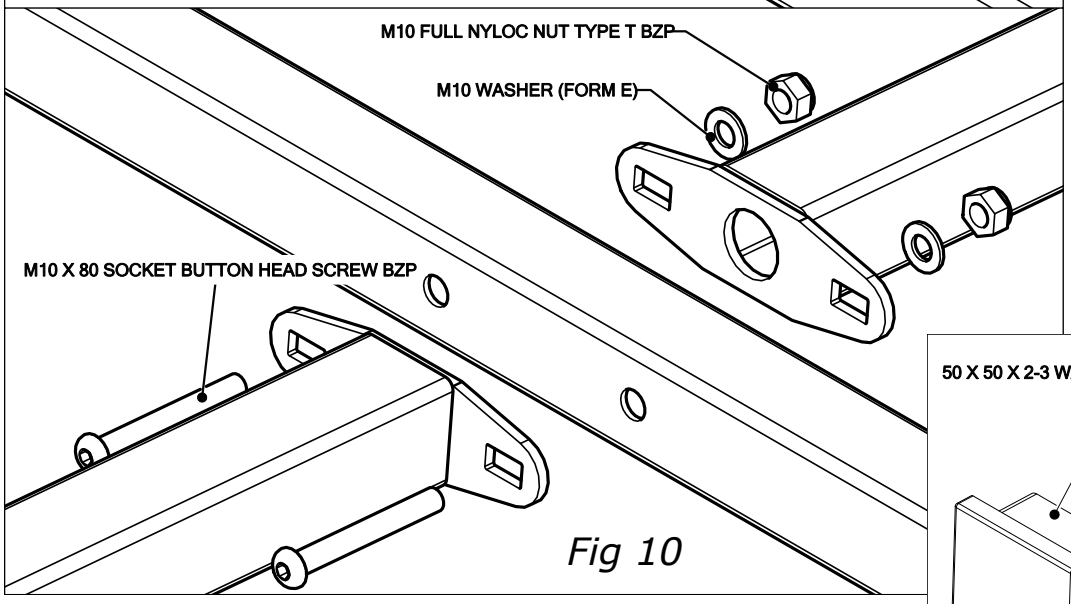

Fig 10

Fit plastic caps to the top four corners.

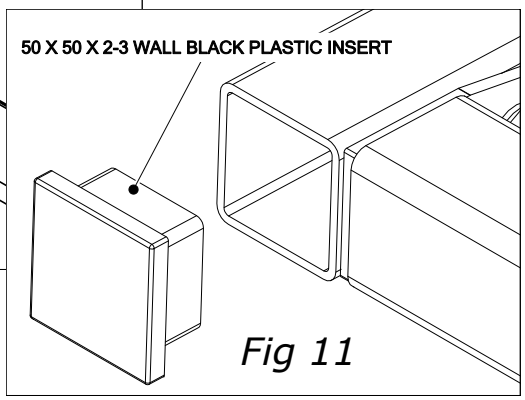

Fig 11

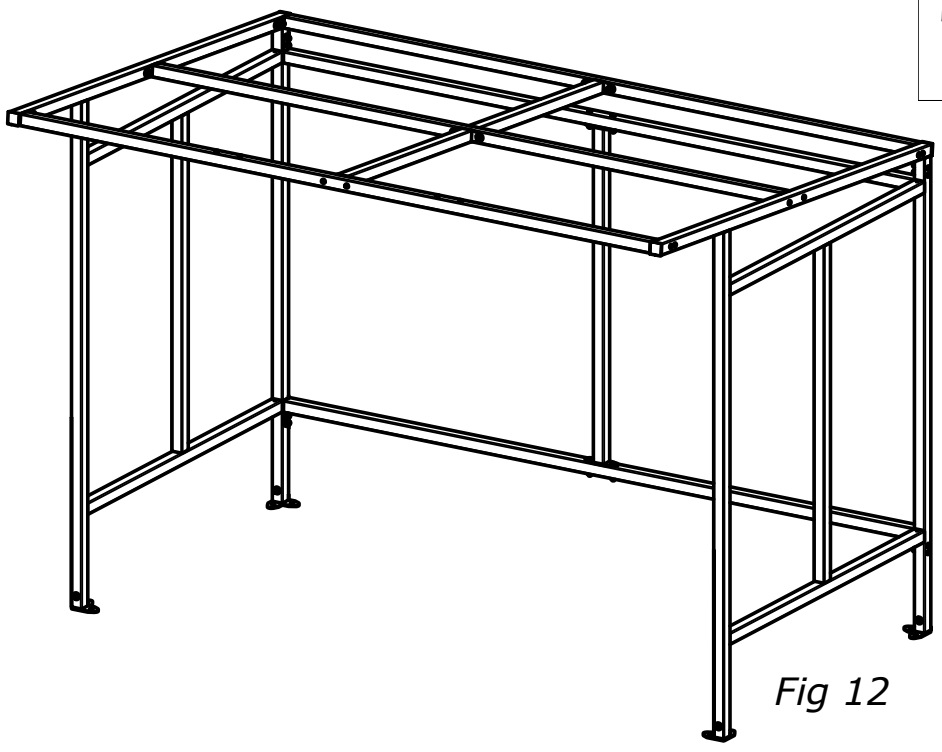

Fig 12

Before tightening all bolts, ensure that the framework is square.

Front Panel Installation

The front panel (V200 2627 99) is supplied as an optional extra.

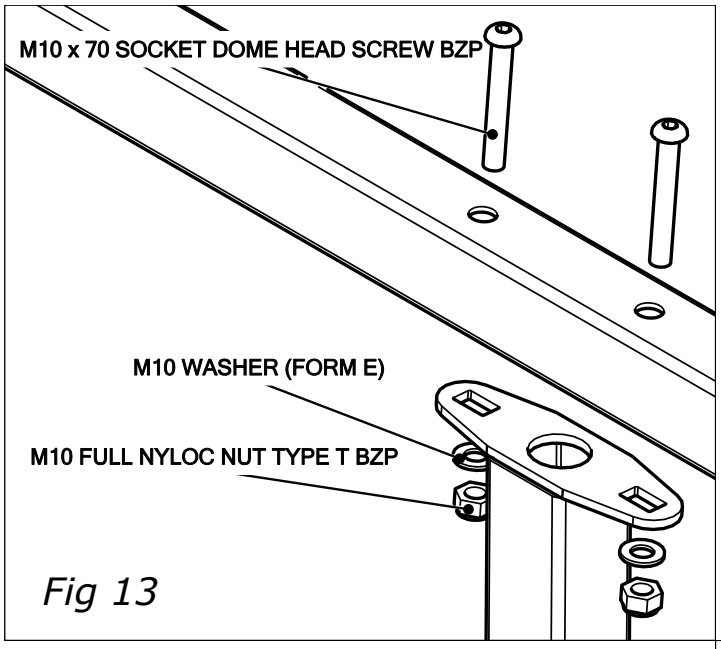

Fig 13

Fit the front panel to the top rail at the front of the shelter using 4no M10 x 70 socket dome head screws.

Note that the top of the front panel is cut at an angle to allow for the slope of the roof. Ensure the front panel is installed so that it sits squarely on the ground.

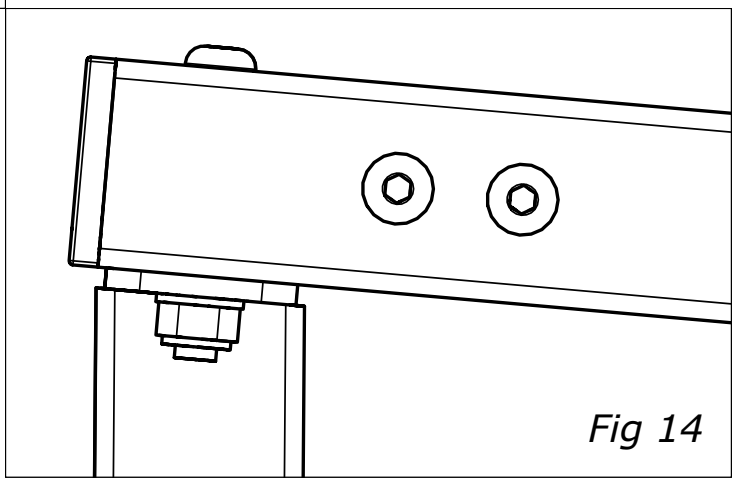

Fig 14

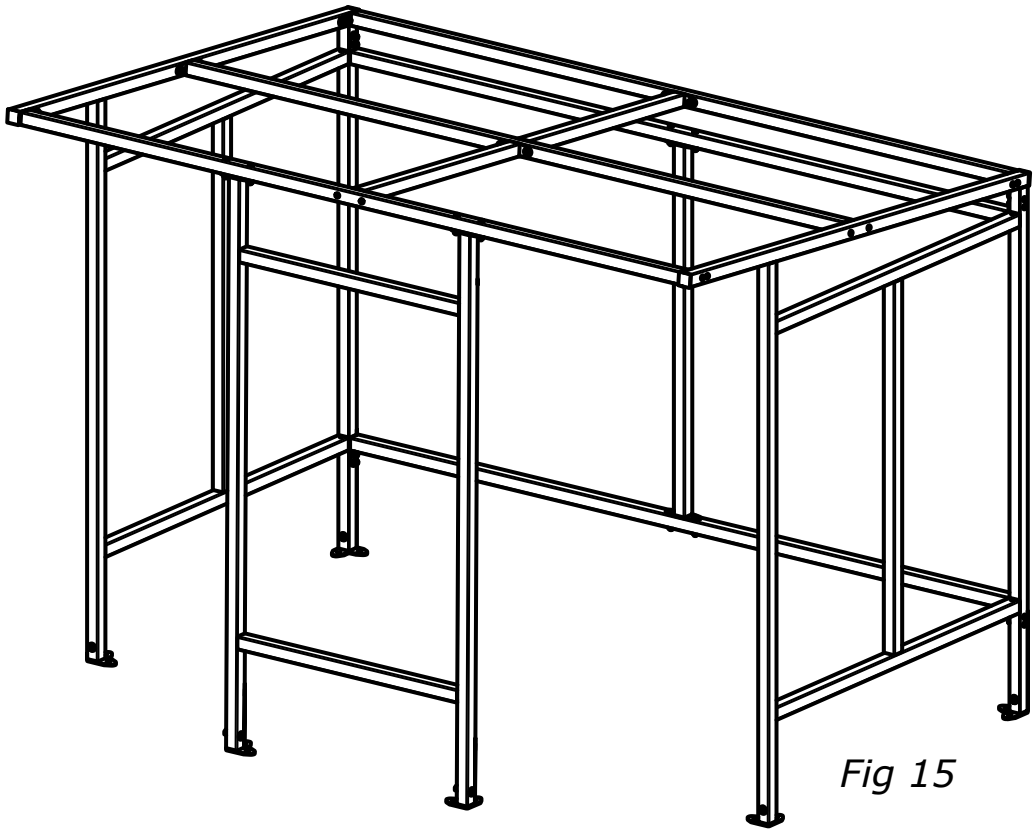

Fig 15

Plastic Installation

Before fitting the sheet, IAE advise that the mid purlins are pre drilled using a drill screw. Drill until it starts to thread then remove and clean to remove all swarf.

- Pre drill ø10mm holes in sheet first to match purlins.
- Fix the sheet to the mid purlins using 5.5x32mm drill screws.

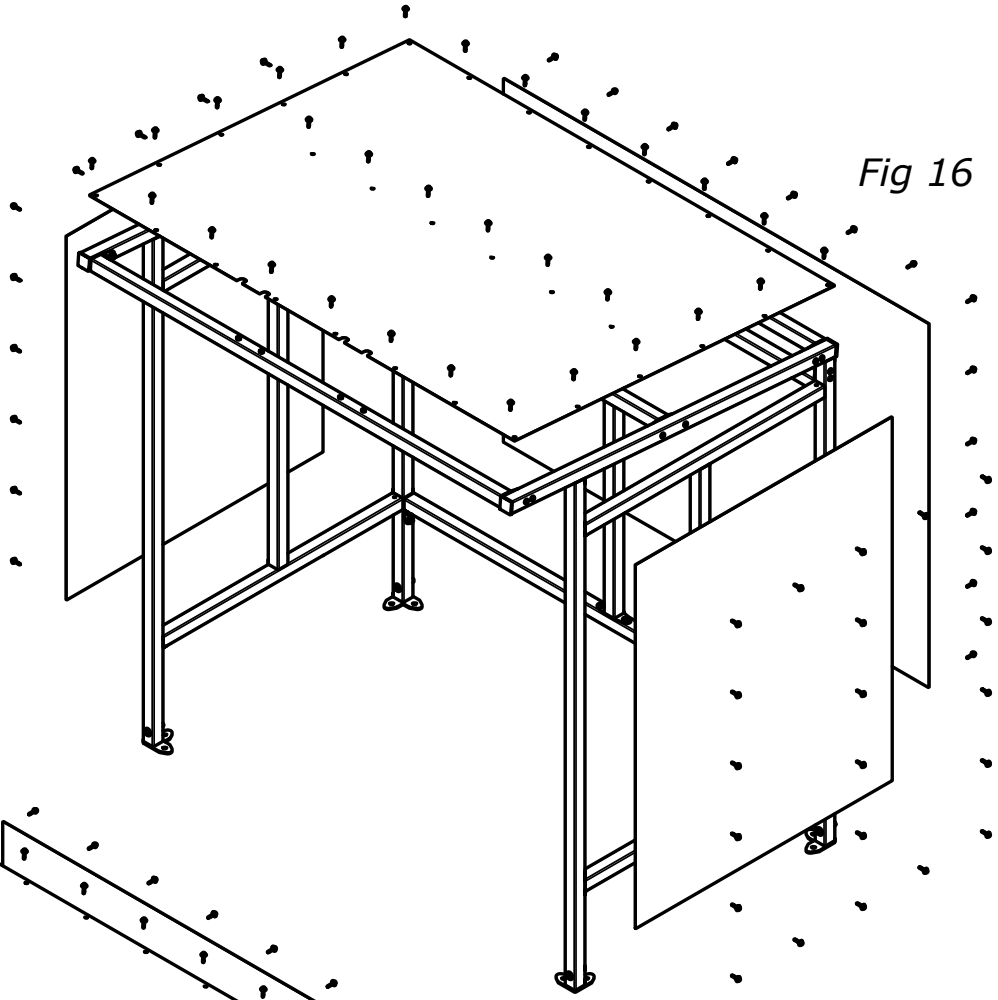

Fig 16

When the shelter is supplied without the front panel, the side panels occupy the full width of the shelter.

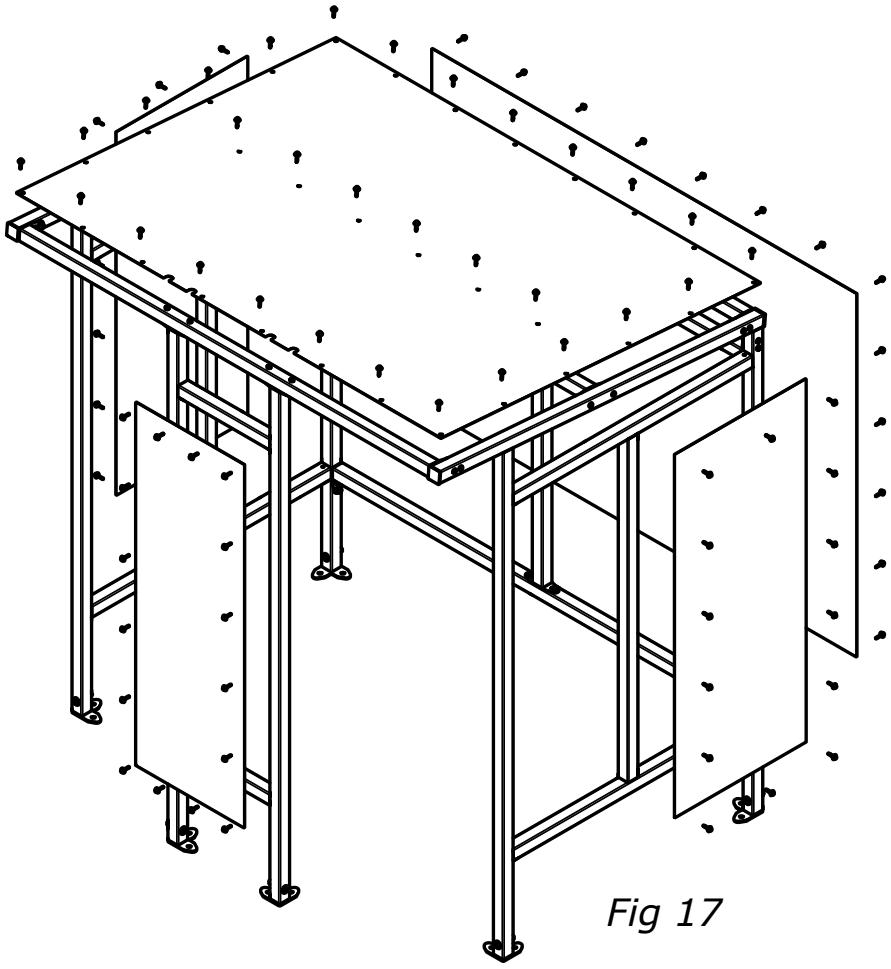

Fig 17

When the shelter is supplied with the front panel, the side panels only occupy the rear half of the shelter.

Exploded Detail - 2000mm x 1500mm Full Sides

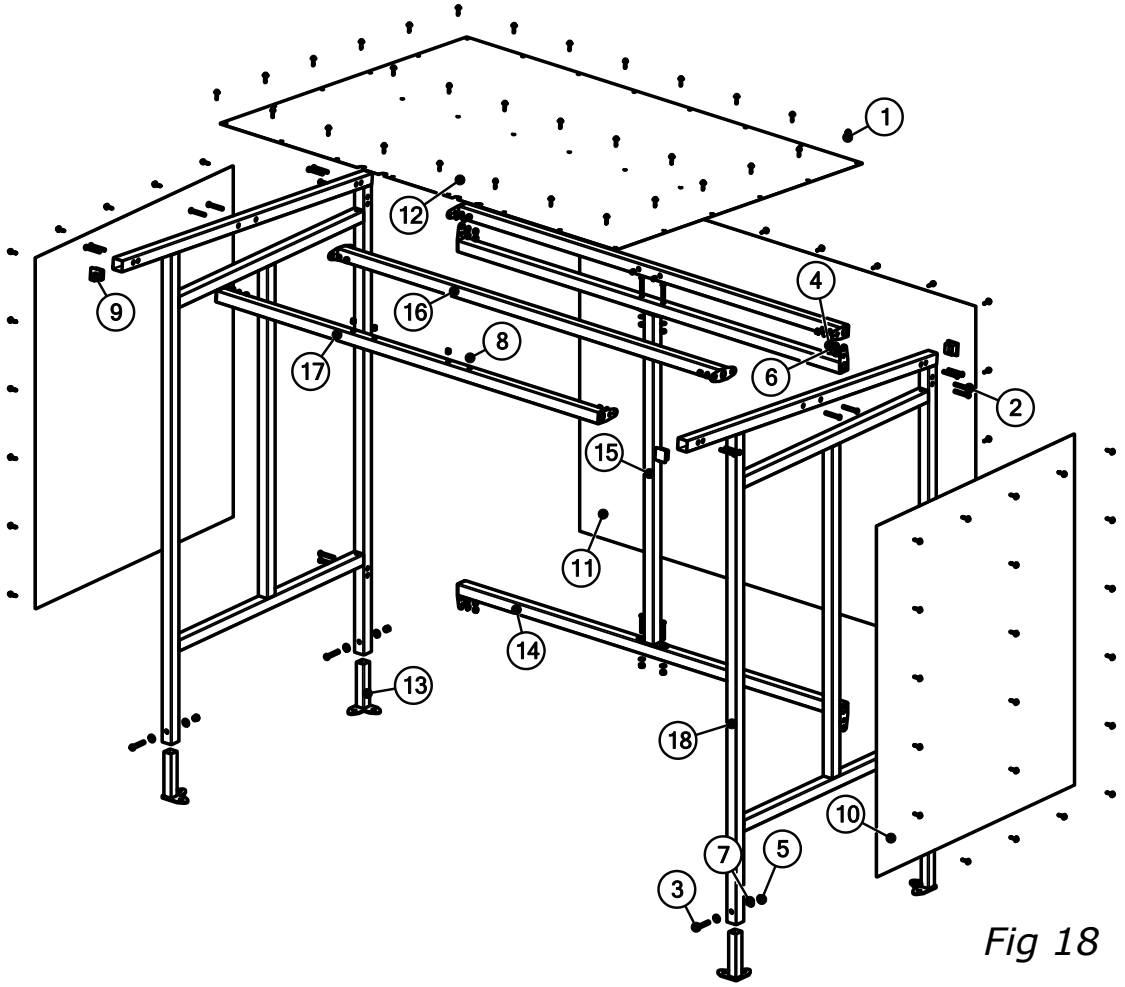

Fig 18

Bill Of Materials

BOM ID	COMPONENT_NO	IAE_DESCRIPTION	Qty
1	B021 3555 32	5.5X32 DRILLSCREW C/W 19MM BOND WASHER	102
2	B029 3100 70	M10 x 70 SOCKET DOME HEAD SCREW BZP	24
3	B029 3120 70	M12 X 70 SOCKET BUTTON HEAD SCREW BZP	4
4	B040 3002 10	M10 FULL NYLOC NUT TYPE T BZP	24
5	B040 3002 12	M12 NYLOC NUT TYPE T BZP	4
6	B041 3050 10	M10 WASHER (FORM E)	24
7	B041 3180 05	1/2in WASHER TABLE 8 BZP	8
8	B115 0016 12	16 O/D X 12 I/D PLASTIC INSERT (PLUG)	12
9	B115 1050 20	50 X 50 X 2-3 WALL BLACK PLASTIC INSERT	4
10	B117 9520 03	1510L X 1230W PETg UV 3mm SHEET	2
11	B117 9526 03	2040L X 1510W PETg UV 3mm SHEET	1
12	B117 9527 03	2040L X 1535W PETg UV 3mm SHEET N & D	1
13	V200 2110 29	SHS 40X40 197L LEG C/W BASEPLATE	4
14	V200 2605 19	50x50 1976L END PURLIN c/w 2HLS & PLTS	3
15	V200 2605 39	50x50 1429L REAR TRIMMER c/w PLTS	1
16	V200 2606 19	50x50 1976L MID PURLIN c/w PLTS	1
17	V200 2607 19	50x50 1976L END PURLIN c/w 4HLS & PLTS	1
18	V200 2608 29	2057/2182Hx1562L FLAT ROOF END FRAME	2

Exploded Detail - 2000mm x 1500mm Half Sides

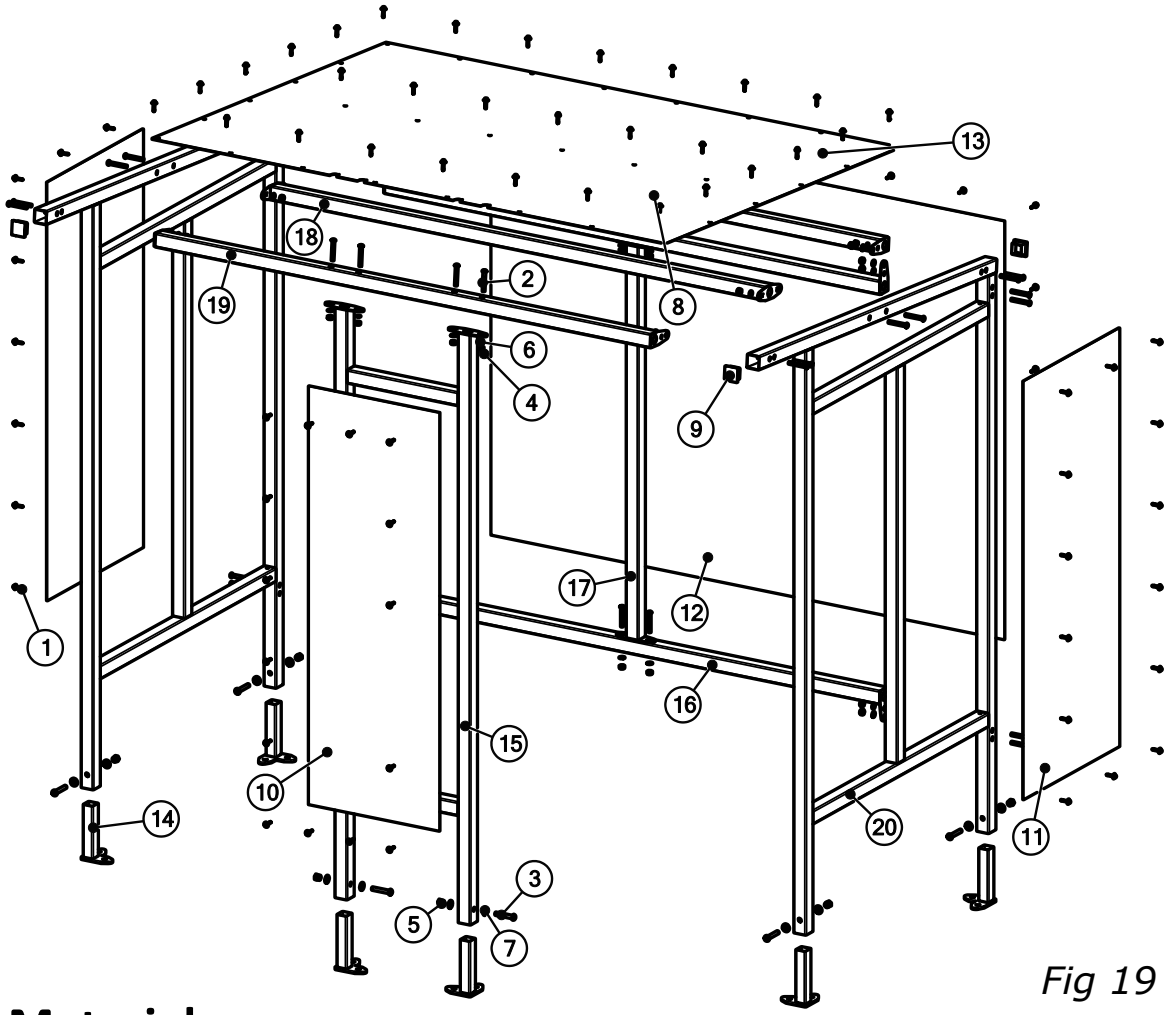

Fig 19

Bill Of Materials

BOM ID	COMPONENT_NO	IAE_DESCRIPTION	Qty
1	B021 3555 32	5.5X32 DRILLSCREW C/W 19MM BOND WASHER	102
2	B029 3100 70	M10 x 70 SOCKET DOME HEAD SCREW BZP	28
3	B029 3120 70	M12 X 70 SOCKET BUTTON HEAD SCREW BZP	6
4	B040 3002 10	M10 FULL NYLOC NUT TYPE T BZP	28
5	B040 3002 12	M12 NYLOC NUT TYPE T BZP	6
6	B041 3050 10	M10 WASHER (FORM E)	28
7	B041 3180 05	1/2in WASHER TABLE 8 BZP	12
8	B115 0016 12	16 O/D X 12 I/D PLASTIC INSERT (PLUG)	12
9	B115 1050 20	50 X 50 X 2-3 WALL BLACK PLASTIC INSERT	4
10	B117 9518 03	1510L X 520W PETg UV 3mm SHEET	1
11	B117 9519 03	1510L X 630W PETg UV 3mm SHEET	2
12	B117 9526 03	2040L X 1510W PETg UV 3mm SHEET	1
13	B117 9527 03	2040L X 1535W PETg UV 3mm SHEET N & D	1
14	V200 2110 29	SHS 40X40 197L LEG C/W BASEPLATE	6
15	V200 2601 79	2133Hx540W FRONT PANEL c/w PLTS	1
16	V200 2605 19	50x50 1976L END PURLIN c/w 2HLS & PLTS	3
17	V200 2605 39	50x50 1429L REAR TRIMMER c/w PLTS	1
18	V200 2606 19	50x50 1976L MID PURLIN c/w PLTS	1
19	V200 2607 19	50x50 1976L END PURLIN c/w 4HLS & PLTS	1
20	V200 2608 29	2057/2182Hx1562L FLAT ROOF END FRAME	2

Exploded Detail - 3000mm x 2000mm Full Sides

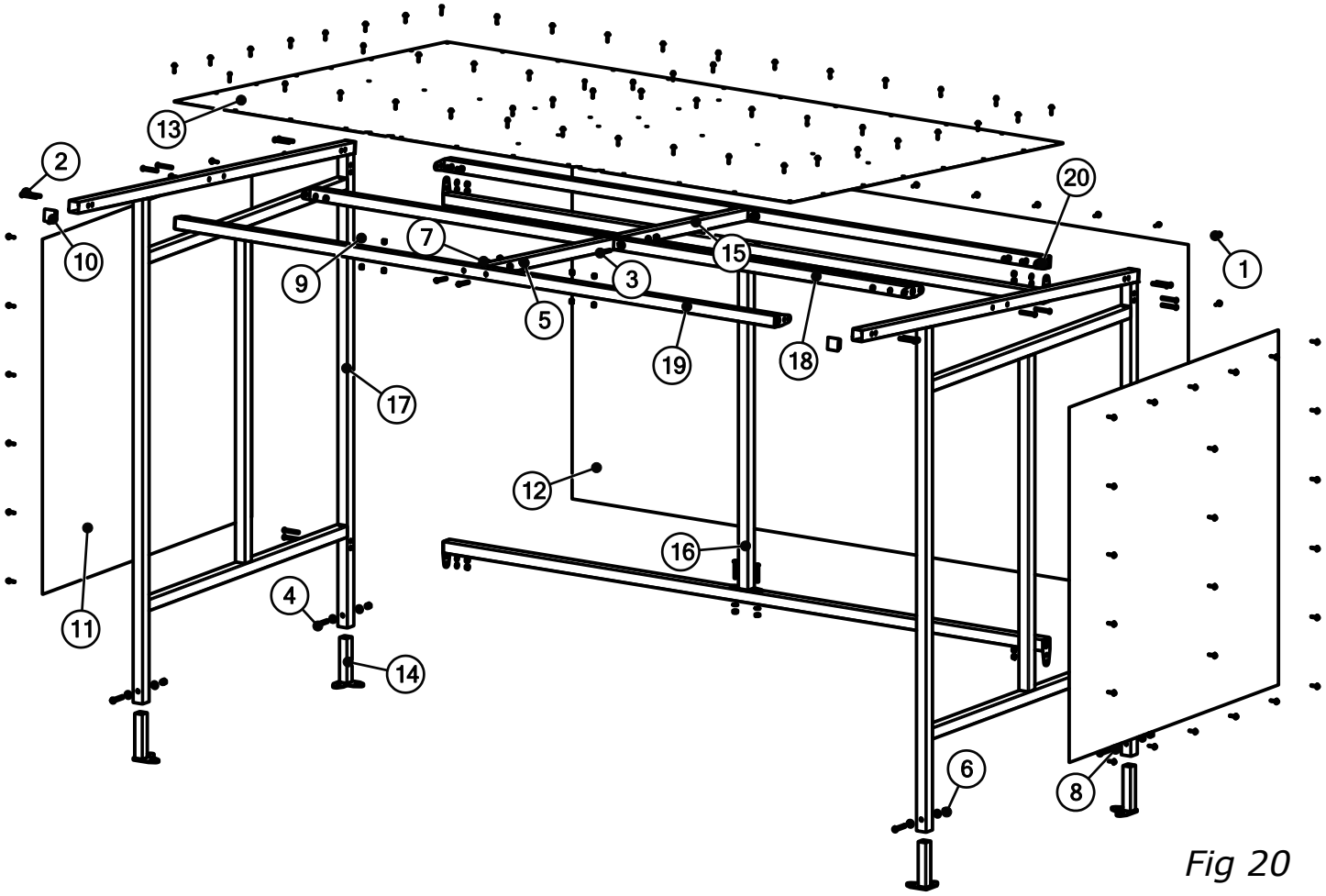

Fig 20

Bill Of Materials

BOM ID	COMPONENT_NO	DESCRIPTION	Qty
1	B021 3555 32	5.5X32 DRILLSCREW C/W 19MM BOND WASHER	134
2	B029 3100 70	M10 x 70 SOCKET DOME HEAD SCREW BZP	28
3	B029 3100 80	M10 X 80 SOCKET BUTTON HEAD SCREW BZP	2
4	B029 3120 70	M12 X 70 SOCKET BUTTON HEAD SCREW BZP	4
5	B040 3002 10	M10 FULL NYLOC NUT TYPE T BZP	30
6	B040 3002 12	M12 NYLOC NUT TYPE T BZP	4
7	B041 3050 10	M10 WASHER (FORM E)	30
8	B041 3180 05	1/2in WASHER TABLE 8 BZP	8
9	B115 0016 12	16 O/D X 12 I/D PLASTIC INSERT (PLUG)	8
10	B115 1050 20	50 X 50 X 2-3 WALL BLACK PLASTIC INSERT	4
11	B117 9515 03	1556L X 1510W PETg UV 3mm SHEET	2
12	B117 9536 03	3050L X 1510W PETg UV 3mm SHEET	1
13	B117 9539 03	3040L X 2040W PETg UV 3mm SHEET N&D	1
14	V200 2110 29	SHS 40X40 197L LEG C/W BASEPLATE	4
15	V200 2604 39	50x50 955L ROOF TRIMMER c/w PLTS	2
16	V200 2605 39	50x50 1429L REAR TRIMMER c/w PLTS	1
17	V200 2607 29	2057/2237HX2052L FLAT ROOF END FRAME	2
18	V200 2608 19	50x50 2976L MID PURLIN c/w 2 HLS & PLTS	1
19	V200 2609 19	50x50 2976L END PURLIN c/w 6 HLS & PLTS	1
20	V200 2610 19	50x50 2976L END PURLIN c/w 2 HLS & PLTS	3

Exploded Detail - 3000mm x 2000mm Half Sides

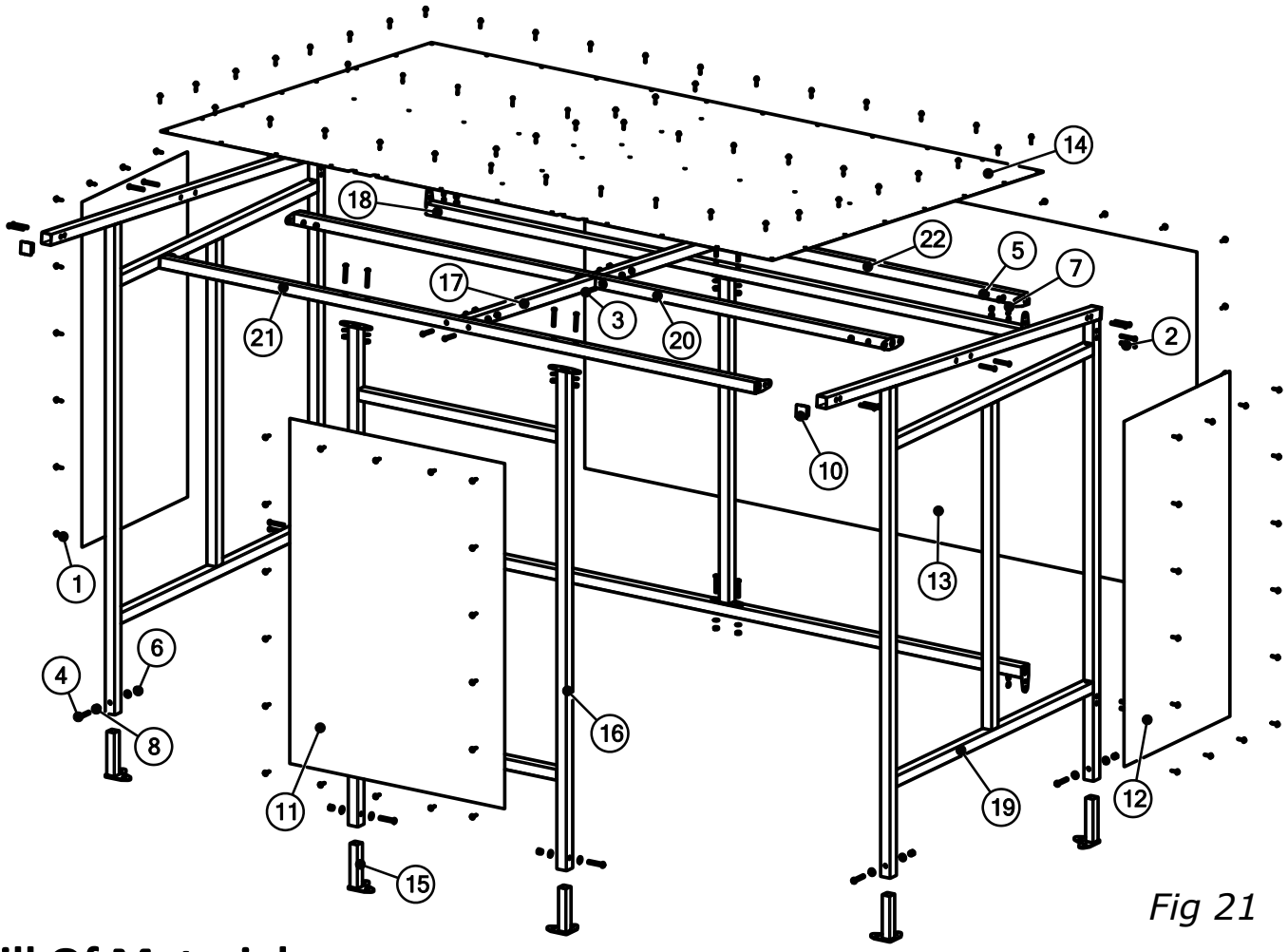

Fig 21

Bill Of Materials

BOM ID	COMPONENT_NO	DESCRIPTION	Qty
1	B021 3555 32	5.5X32 DRILLSCREW C/W 19MM BOND WASHER	136
2	B029 3100 70	M10 x 70 SOCKET DOME HEAD SCREW BZP	32
3	B029 3100 80	M10 X 80 SOCKET BUTTON HEAD SCREW BZP	2
4	B029 3120 70	M12 X 70 SOCKET BUTTON HEAD SCREW BZP	6
5	B040 3002 10	M10 FULL NYLOC NUT TYPE T BZP	34
6	B040 3002 12	M12 NYLOC NUT TYPE T BZP	6
7	B041 3050 10	M10 WASHER (FORM E)	34
8	B041 3180 05	1/2in WASHER TABLE 8 BZP	12
10	B115 1050 20	50 X 50 X 2-3 WALL BLACK PLASTIC INSERT	4
11	B117 9516 03	1510L X 1070W PETg UV 3mm SHEET	1
12	B117 9517 03	1510L X 790W PETg UV 3mm SHEET	2
13	B117 9536 03	3050L X 1510W PETg UV 3mm SHEET	1
14	B117 9539 03	3040L X 2040W PETg UV 3mm SHEET N&D	1
15	V200 2110 29	SHS 40X40 197L LEG C/W BASEPLATE	6
16	V200 2602 79	2187Hx1090W FRONT PANEL c/w PLTS	1
17	V200 2604 39	50x50 955L ROOF TRIMMER c/w PLTS	2
18	V200 2605 39	50x50 1429L REAR TRIMMER c/w PLTS	1
19	V200 2607 29	2057/2237HX2052L FLAT ROOF END FRAME	2
20	V200 2608 19	50x50 2976L MID PURLIN c/w 2 HLS & PLTS	1
21	V200 2609 19	50x50 2976L END PURLIN c/w 6 HLS & PLTS	1
22	V200 2610 19	50x50 2976L END PURLIN c/w 2 HLS & PLTS	3

Maintenance

Routine visual inspection

Smoking shelter equipment may be subject to heavy use or vandalism, weekly inspection of this type can be necessary.

Examples of frame inspection points are:

Cleanliness.

Tightness of all fixings.

Signs of corrosion or wear.

Missing parts.

Structural integrity.

Maintenance of plastic sheeting:

Wipe down regularly with warm soapy water using a non-abrasive cloth.

Check for surface damage.

Light scuffs and scratches can be repaired by dusting with hot air gun or pencil torch flame.

Cracked or severely damaged panels should be removed and replaced.

NOTE: IAE do not supply ground fixings

IMPORTANT

Only use genuine IAE service parts when servicing IAE equipment

MOSSFIELD ROAD, ADDERLEY GREEN, STOKE ON TRENT, STAFFORDSHIRE. ST3 5BW
TEL: +44 (0)1782 339320 FAX: +44 (0)1782 339321 WEB: www.iae.co.uk